Installation Guide

LED Lighting Fixture

SAVE THESE INSTRUCTIONS

BEFORE YOU BEGIN

Read and follow all safety instructions

WARNING

RISK OF FIRE, EXPLOSION AND ELECTRIC SHOCK

- This product should be installed, inspected, and maintained by a qualified electrician only, in accordance with the NEC (National Electric Code) and all local codes.
- This person should be familiar with the construction and operation of the product and the hazards involved.
- This light is for outdoor use and should not be used in areas of limited ventilation or high ambient temperature.
- Turn off electrical power before inspection, installation or removal.
- Disconnect the power by turning off the circuit breaker - turning the power off by using a light switch is not sufficient to prevent electrical shock.
- Make sure the fixture is cool to the touch before performing maintenance.

Prepare Electrical Wiring

Electrical Requirements

- The fixture must be supplied with a voltage within the specified rating on the product label.
- The fixture must be connected to an individual, grounded branch circuit protected by a properly sized circuit breaker.
- Only use UL (or other NTRL) approved wire for supply connections - minimum 18 AWG, 75°C rated supply wire.

Grounding Instructions

- The grounding and bonding of the overall system shall be done in accordance with NEC Article 600 and local codes.

LED Post Top

LED-3777

Installation Guide

Tools Required

- Wire Strippers
- Phillips Screwdriver
- Slotted Screwdriver
- Crescent Wrench or Hex Socket Wrench

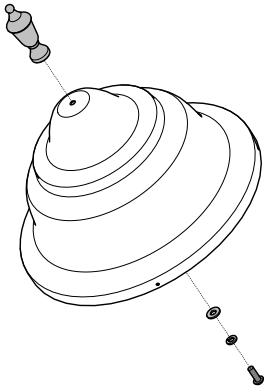

Figure 1

Preparation

- Check for visible damage to the fixture, accessories or electrical wires. This unit is designed to be installed on a 3" pole or tenon.

⚠ **CAUTION**: Ensure the branch supply power is shut off at the breaker panel <u>before</u> continuing with the installation.

Installation

1. Assemble the finial and cover with the provided hardware [**Figure 1**].

2. Fit the assembled cover over the reflector and align the holes of the cover with the reflector [**Figure 2**].

3. Assemble the cover and reflector with the provided hardware. A flat washer, spring washer and hex nut should be used to secure each screw from inside of the reflector [**Figure 3**].

4. Remove the center conduit plug on the housing base and adjust the FAO controller to the desired wattage/CCT settings [**Figure 4**].

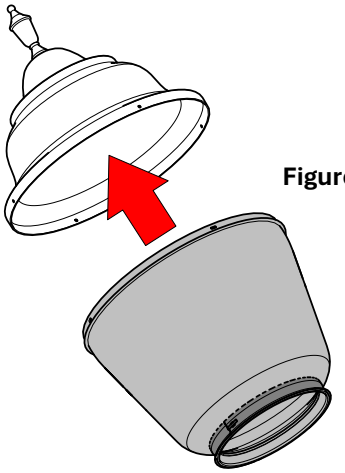

Figure 2

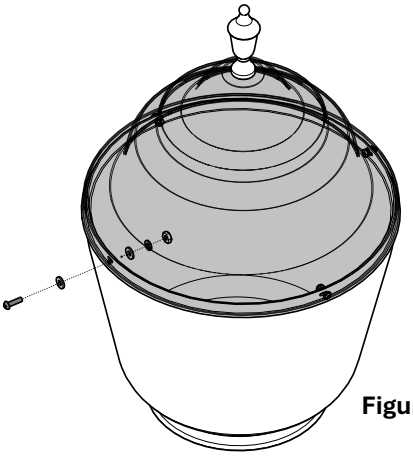

Figure 3

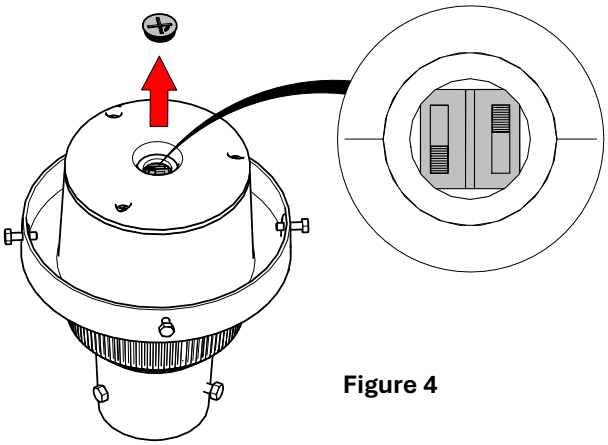

Figure 4

Installation (continued)

5. Place the assembled globe into the groove of the housing base and secure with the four (4) hex bolts provided [**Figure 5**].

6. Wire the fixture leads to the supply leads per the **Wiring Diagram** and place the fixture on the pole or tenon. Secure with the three (3) hex bolts [**Figure 6**].

   Note: Ensure that the base of the fixture is completely seated on the pole and that no wires are pinched before tightening the bolts.

7. Remove the clear conduit plug to access the photocontrol switch [**Figure 7**]. Adjust to the desired setting and reinstall the plug securely to prevent water ingress.
   Note: Do not pull on or disconnect the photocontrol wire harness.

8. Restore branch supply power and ensure the fixture functions properly. If the fixture does not turn on or function properly shut off the branch supply power and recheck all electrical connections.

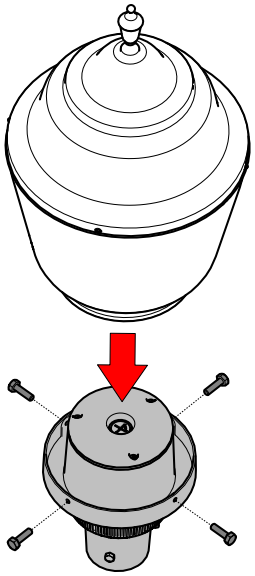

Figure 5

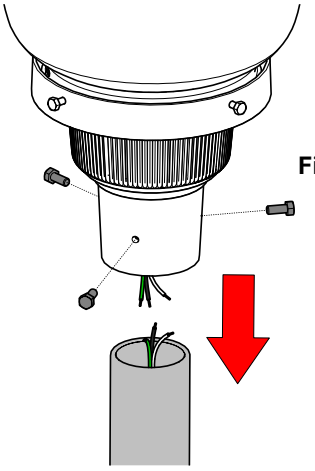

Figure 6

Wiring Diagram

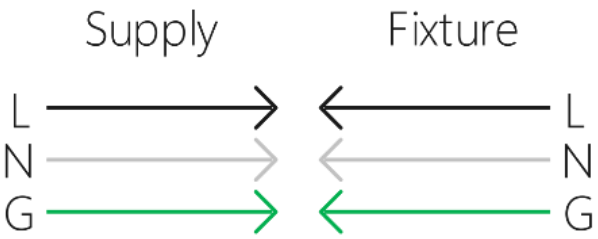

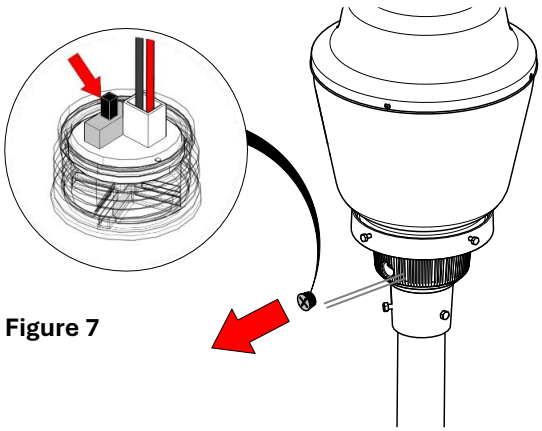

Figure 7